WV-S8574LG

4 x 4K (33MP) Outdoor Multi-Directional Network Camera with AI Engine

Industry thinnest* multi-directional cameras with AI Engine

- 4 x 4K(25MP) 3840x2160 up to 15fps
- 270° coverage with one IP address
- Intelligent Auto (with AI Engine)
- Super Dynamic 120dB
- Color night vision (0.084 to 0.12 lx)
- Smart Coding (with AI Engine)
- Built-in 360° IR LED
- Continuous view assistance
- Wide range tilt angle adjustment mechanism
- Built-in FIPS 140-2 Level 3 Compliant Secure Element
  (EdgeLock® SE050F NXP® Semiconductors)
- NDAA Compliant

*As of February 2022, based on i-PRO own research.

i-PRO

SPECIFICATIONS

Camera	
Image Sensor	4x 1/2.8 type CMOS image sensor
Scanning Area	5.56 mm(H) x 3.13 mm(V) {7/32 inches(H) × 1/8 inches(V)}
Minimum Illumination	Color : 0.24 lx (30IRE, F1.44, 1/30s, AGC:11)* 0.34 lx (50IRE, F1.44, 1/30s, AGC:11) 0.021 lx (50IRE, F1.44, 16/30s, AGC:11)* BW : 0 lx (50IRE, F1.44, 1/30s, AGC:11, IR LED: On) 0.14 lx (50IRE, F1.44, 1/30s, AGC:11) 0.009 lx (50IRE, F1.44, 16/30s, AGC:11)* *Converted value
White Balance	ATW1/ ATW2/ AWC
Maximum shutter	15 fps mode: Max.1/10000s to Max.16/30s 12.5 fps mode: Max.1/10000s to Max.16/25s
Intelligent Auto	On / Off
Super Dynamic	On / Off The level can be set in the range of 0 to 31.
Dynamic Range	Max.120 dB (Super Dynamic : On, Level 31)
Adaptive Black Stretch	The level can be set in the range of 0 to 255.
Back Light Compensation/High Light Compensation	BLC (Back light compensation) HLC (High light compensation) Off (only when Super dynamic / Intelligent Auto : Off)
Fog Compensation	On / Off (only when Intelligent auto / auto contrast adjust : Off)
Maximum Gain (AGC)	The level can be set in the range of 0 to 11.
Color/BW (ICR)	Off / On(IR Light Off) / On(IR Light On) / Auto1(IR Light Off) / Auto2(IR Light On) / Auto3(SCC)
IR LED Light	High / Middle / Low / Off Maximum irradiation distance : 30 m {Approx. 99 ft} (30IRE) 21 m {Approx. 69 ft} (50IRE)
Digital Noise Reduction	The level can be set in the range of 0 to 255.
Panorama	Panorama mode (H: 180 deg.)
Video Motion Detection (VMD)	On / Off, 4 areas available
Scene Change Detection (SCD)	On / Off, 1 areas available
Audio Detection	On / Off
AI Sound Classification	Selectable from Gunshot, Yell, Vehicle horn, Glass break

AI Analytics	AI Video Motion Detection, AI Face Detection, AI People Detection, AI Vehicle Detection, AI Non mask Detection (prior to V2.70), AI Occupancy Detection, AI Scene Change Detection For details : https://i-pro.com/products_and_solutions/en/surveillance/products/analytics-software 3rd party applications are also available. https://i-pro.com/products_and_solutions/en/surveillance/solutions/edge-ai-platform/application-list
Privacy Zone	On / Off Up to 8 zones available
VIQS	On / Off Up to 8 zones available
Image Rotation	0° (Off)/ 90°/ 180° (Upside-down)/ 270°
Camera Title (OSD)	On / Off Up to 40 characters Up to 2 Lines (alphanumeric characters, marks)
Focus Adjustment	—

Lens	
Optical zoom	1x
Extra zoom	max 6x (when resolution is 640x360)
Focal length	3.1 mm {1/8 inches}
Angular Field of View	Horizontal : 108°, Vertical : 56°
Maximum Aperture Ratio	1 : 1.4
Focus range	3 m {9.84 ft} – ∞

DORI	
Detect (25ppm / 8ppf)	55.8 m / 183.1 ft
Observe (62.5ppm / 19ppf)	22.3 m / 73.2 ft
Recognize (125ppm / 38ppf)	11.2 m / 36.6 ft
Identify (250ppm / 76ppf)	5.6 m / 18.3 ft

System on Chip (SoC)	
System on Chip (SoC)	Ambarella CV2

Adjusting Angle	
Adjusting Angle	Camera 1, 2, 3, 4: Horizontal : ±125° (Adjust by horizontal (PAN) angle) Vertical : +10° to +105° (Adjust by vertical (TILT) angle) Yaw : ±90° (Adjust by azimuth (YAW) angle) Twist : ±30° *The above is the adjustable range of a single camera. The adjustable range of each camera varies according to the positional relationship with other cameras.

Browser GUI	
Camera Control	Brightness, AUX On / Off
Audio	Mic (Line) Input : On / Off Volume adjustment : Low / Middle / High Audio Output : On / Off Volume adjustment : Low / Middle / High
GUI / Setup Menu Language	English, Italian, French, German, Spanish, Portuguese, Russian, Chinese, Japanese
Browser	Microsoft Edge, Firefox, Google Chrome

Network

Network IF	10Base-T / 100Base-TX / 1000Base-T, RJ45 connector
Resolution H.265/ H.264/ JPEG (MJPEG)	[16:9 mode*] *Cannot be changed. 3840x2160, 2560x1440, 1920x1080, 1280x720, 640x360, 320x180
H.265/H.264	[Transmission Mode] Constant bit rate / VBR / Frame rate / Best effort [Transmission Type] Unicast port (AUTO) / Unicast port (MANUAL) / Multicast
JPEG	[Image Quality] 10 steps
Smart Coding	GOP (Group of pictures) control : On (Frame rate control)* / On (Advanced)* / On (Mid) / On (Low) / Off *On (Frame rate control) and On (Advanced) are only available with H.265. Smart VIQS: On(High)/On(Low)/Off, Smart P-picture control: On/Off
Audio Compression	G.726 (ADPCM) : 16 kbps / 32 kbps G.711 : 64 kbps AAC-LC : 64 kbps / 96 kbps / 128 kbps
Audio Transmission Mode	Off / Mic (Line) input / Audio output / Interactive (Half duplex) / Interactive (Full duplex)
Supported Protocol	IPv6 : TCP/IP, UDP/IP, HTTP, HTTPS, SSL/TLS, SMTP, DNS, NTP, SNMPv1/v2/v3, DHCPv6, RTP, MLD, ICMP, ARP, IEEE 802.1X, DiffServ, LLDP, MQTT IPv4 : TCP/IP, UDP/IP, HTTP, HTTPS, SSL/TLS, RTSP, RTP, RTP/RTCP, SMTP, DHCP, DNS, DDNS, NTP, SNMPv1/v2/v3, UPnP, IGMP, ICMP, ARP, IEEE 802.1X, DiffServ, SRTP, LLDP, MQTT
No. of Simultaneous Users	Up to 24 users (Depends on network conditions)
Secure	FIPS 140-2 level 3 (NXP® EdgeLock® SE050F), Device Certificate GlobalSign® pre-installed, HTTPS, User authentication, Digest authentication, Host authentication, IEEE802.1X, System log, Image transmission log, Brute-force protection, Alteration detection, Signed Firmware
SDXC/SDHC/SD Memory Card	H.265 / H.264 recording : Manual REC / Alarm REC (Pre/Post) / Schedule REC / Backup upon network failure JPEG recording : Manual REC / Alarm REC (Pre/Post) / Backup upon network failure Compatible SDXC/SDHC/SD Memory Card : microSDXC memory card : 64 GB, 128 GB, 256 GB, 512 GB microSDHC memory card : 4 GB, 8 GB, 16 GB, 32 GB microSD memory card : 2 GB
Mobile Terminal Compatibility	iPad, iPhone, Android™ terminals
ONVIF® Profile	G / M / S / T

Alarm	
Alarm Source	3 terminals input, VMD alarm, SCD alarm, Command alarm, Audio detection alarm
Alarm Actions	SDXC/SDHC/SD memory recording, E-mail notification, HTTP alarm notification Indication on browser, TCP alarm notification output

Input/Output	
Audio input	ø3.5 mm stereo mini jack For microphone input : Recommended applicable microphone : Plug-in power type (Sensitivity of microphone : -48 dB±3 dB (0 dB=1 V/Pa, 1 kHz)) Input impedance : Approx. 2 kΩ (unbalanced) Supply voltage : 2.4 V ±0.5 V For line input : Input level: Approx. −10 dBV
Audio Output	ø3.5 mm stereo mini jack (monaural output) Output impedance : Approx. 600 Ω (unbalanced) Output level : −20 dBV
External I/O Terminals	ALARM IN 1 (Alarm input 1/ Black & white input/ Auto time adjustment input) (x1) ALARM IN 2 (Alarm input 2/ ALARM OUT) (x1), ALARM IN 3 (Alarm input 3/ ALARM OUT/ AUX OUT) (x1)

Monitor Output	-
Wi-Fi USB Adapter	Yes (for adjustment)

General	
Safety	UL (UL62368-1), c-UL (CSA C22.2 No.62368-1), CE, IEC62368-1
EMC	FCC (Part15 ClassA), ICES-003 ClassA, EN55032 ClassA, EN55035
Power Source and Power Consumption	PoE+ (IEEE802.3at compliant): DC 54 V: 470 mA/Approx. 25.4 W (Class 4 device)
Ambient Operating Temperature	−40 °C to +60 °C {−40 °F to 140 °F} (Power On range: −20 °C to +60 °C {−4 °F to 140 °F}) Maximum temperature according to NEMA TS 2 (2.2.7): 74 °C(165 °F)
Ambient Operating Humidity	10 to 100 % (no condensation)
Anti-Condensation System	Temish element + moisture absorption gel
Water and Dust Resistance	IP67/IP66 (IEC 60529), Type 4X (UL50E), NEMA 4X compliant
Shock Resistance	IK10 (IEC 62262)
Wind Resistance	Up to 40 m/s {approx. 89 mph}
Other standard support	NEMA TS 2 (2.2.7-2.2.9)
Dimensions	When using the attachment plate only : ø300 mm × 90 mm (H) {ø11-13/16 inches ×3-17/32 inches (H)}
Mass (approx.)	When using the attachment plate only : Approx. 3.3 kg {7.28 lbs}
Finish	Main body : Aluminum die cast, i-PRO white Outer fixing screws : Stainless steel (Corrosion-resistant treatment) Dome cover : PC resin, Smoke

NOTES

Important
– Safety Precautions : Carefully read the Basic Information,Installation Guide and Operating Instructions before using this product.
– i-PRO Co., Ltd. cannot be held responsible for the performance of the network and/or other manufacturers' products used on the network.
– Masses and dimensions are approximate.
– Specifications are subject to change without notice.
Trademarks and registered trademarks
– iPad and iPhone are trademarks of Apple Inc., registered in the U.S.and other countries. – Android is a trademark of Google LLC.
– ONVIF is a trademark of ONVIF, Inc.
– All other trademarks identified herein are the property of their respective owners
©i-PRO Co., Ltd All rights reserved / March 2023

OPTIONAL ACCESSORIES

Select a compatible accessory
Accessory Selector (i-pro.com)

WV-QWL506-W
4-screw Wall Mount Bracket

WV-QWL506M1-W
ANSI Male Wall Mount Bracket (1.5"NPT)

WV-QWL501-W
Mount Bracket

WV-QSR503M1-W
Mount Bracket

WV-QSR503F1-W
Mount Bracket

WV-QSR503-W
Mount Bracket

WV-QPL500-W
Mount Bracket

WV-QJB503-W
Base Bracket

WV-QCN500-W
Mount Bracket

WV-QCL501-W
Mount Bracket

WV-QCL101-W
Mount Bracket

WV-QSR503F-W
Mount Bracket

WV-QCL100-W
Mount Bracket

WV-QSR503M-W
Mount Bracket

WV-Q105A
Mount Bracket

WV-SDB256G
i-PRO SD Memory Card

WV-SDB128G
i-PRO SD Memory Card

WV-SDB064G
i-PRO SD Memory Card

WV-SDB032G
i-PRO SD Memory Card

WV-QDC501G
Dome Cover

WV-QDC501C
Dome Cover

WV-QCA501A
I/O Cable

WV-PM500
Compact microphone unit

APPEARANCE

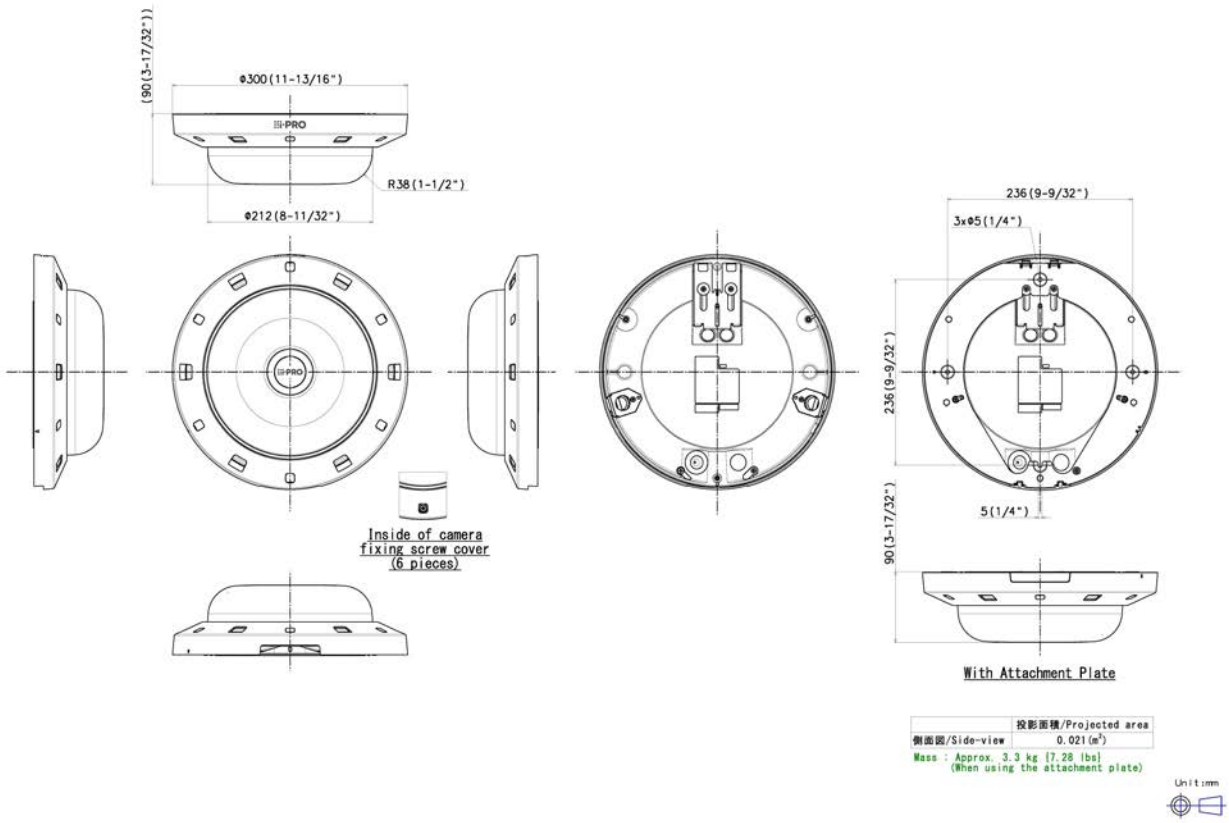
(90(3-17/32"))
Φ300(11-13/16")
R38(1-1/2")
Φ212(8-11/32")
236(9-9/32")
3xΦ5(1/4")
236(9-9/32")
5(1/4")
90(3-17/32")
Inside of camera
fixing screw cover
(6 pieces)
With Attachment Plate
投影面積/Projected area
側面図/Side-view
0.021(m²)
Mass : Approx. 3.3 kg (7.28 lbs)
(When using the attachment plate)
Unit:mm