WV-S4176A

12MP Sensor Indoor 360 Fisheye Network Camera with AI engine

Edge AI 360-degree fisheye camera for video surveillance and business intelligence

- 12MP Sensor Indoor 360-degree Fisheye Camera
- Up to 3 Edge AI analytic apps
- Built-in FIPS 140-2 Level 3 Compliant SecureElement (EdgeLock® SE050F NXP® Semiconductors)
- NDAA Compliant

SPECIFICATIONS

Camera	
Image Sensor	Approx. 1/2 type 12MP CMOS image sensor
Minimum Illumination	Color : 0.2 lx (30IRE, F1.9, 1/30s, AGC:11)* 0.3 lx (50IRE, F1.9, 1/30s, AGC:11) 0.02 lx (50IRE, F1.9, 16/30s, AGC:11)* BW : 0.2 lx (50IRE, F1.9, 1/30s, AGC:11) 0.01 lx (50IRE, F1.9, 16/30s, AGC:11)* *Converted value
Intelligent Auto	On / Off
Maximum Shutter	max. 16/30s to Max. 1/10000s
Super Dynamic	On / Off, The level can be set in the range of 0 to 31.
Dynamic Range	Max.84 dB (Wide Dynamic Range : On, Level: 31)
Image Settings	Gain (AGC), White balance
Image Compensation	Adaptive black stretch, Back light compensation (BLC), Fog compensation, High light compensation (HLC), Digital noise reduction
Day / Night (Electrical)	Off / Auto
Video Motion Detection (VMD)	On / Off, 4 areas available
Scene Change Detection (SCD)	On / Off, 1 areas available
Audio Detection	On / Off
AI Sound Classification	Gunshot, Yell, Vehicle horn, Glass break
AI Analytics	AI-VMD/AI People Counting for 360-degree fisheye camera, AI Privacy Guard for 360-degree fisheye camera, AI Non mask Detection (prior to V2.70), AI Scene Change Detection For details : https://i-pro.com/products_and_solutions/en/surveillance/products/analytics-software 3rd party applications are also available. https://i-pro.com/products_and_solutions/en/surveillance/solutions/edge-ai-platform/application-list
Privacy Zone	On / Off, Up to 8 zones available
Camera Title (OSD)	On / Off, Up to 20 characters (alphanumeric characters, marks)
Fixing angle adjustment	-5°, 0°, +5°

Lens	
Zoom Ratio	1x
Digital (Electronic) Zoom	Choose from 3 levels of x1, x2, x4
Focal Length	1.4 mm {1/16 inches}
Maximum Aperture Ratio	1:1.9
Focus Range	0.5 m {19-11/16 inches} - ∞
Angular Field of View	Horizontal : 183°, Vertical : 183°

DORI

Distance to the object in the center of the image	Detect (25 ppm / 8 ppf) : 29.9 m / 98.2 ft, Observe (62.5 ppm / 19 ppf) : 12.0 m / 39.3 ft, Recognize (125 ppm / 38 ppf) : 6.0 m / 19.6 ft, Identify (250 ppm / 76 ppf) : 3.0 m / 9.8 ft
Coverage radius when mounted at a height of 3 m (10 ft)	Detect (25 ppm / 8 ppf) : 56.1 m / 184.2 ft, Observe (62.5 ppm / 19 ppf) : 20.6 m / 67.6 ft, Recognize (125 ppm / 38 ppf) : 8.4 m / 27.6 ft, Identify (250 ppm / 76 ppf) : 0.3 m / 0.9 ft

System on Chip (SoC)	
System on Chip (SoC)	Ambarella CV22

Browser GUI	
Camera Control	Brightness, AUX On / Off
Audio	Mic (Line) Input : On / Off Volume adjustment : Low / Middle / High Audio Output : On / Off Volume adjustment : Low / Middle / High
GUI / Setup Menu Language	English, Italian, French, German, Spanish, Portuguese, Russian, Chinese, Japanese

Network	
Network IF	10Base-T / 100Base-TX, RJ45 connector
Resolution <Ceiling> <Wall>	•Fisheye mode (max. 30 fps/25 fps) 2992×2992 / 2192×2192 / 1280×1280 / 640×640 / 320×320 •Quad PTZ mode (max. 15 fps/12.5 fps), Single PTZ mode (max. 15 fps/12.5 fps) 2560×1920*3 / 2048×1536 / 1600×1200 / 1280×960 / 800×600 / VGA / QVGA
Resolution <Ceiling>	•Double Panorama mode (max. 15 fps/12.5 fps) 2560×1440 / 1920×1080 / 1280×720 / 640×360 / 320×180 •Fisheye + Double Panorama mode (max. 15 fps/12.5 fps) (Fisheye) 2992×2992 / 2192×2192 / 1280×1280 / 640×640 / 320×320 (Double Panorama) 1280×720 / 640×360 / 320×180 •Fisheye + Quad PTZ mode (max. 15 fps/12.5 fps) (Fisheye) 2992×2992 / 2192×2192 / 1280×1280 / 640×640 / 320×320 (Quad PTZ) 1280×960 / 800×600 / VGA / QVGA •Quad streams mode (Single PTZ (Quad streams)) 1280×960 / 800×600 / VGA / QVGA (max. 15 fps/12.5 fps) (Quad PTZ) 2560×1920 / 2048×1536 / 1600×1200 / 1280×960 / 800×600 / VGA / QVGA (max. 5 fps)
Resolution <Wall>	•Panorama mode (max. 15 fps/12.5 fps) 2560×1440 / 1920×1080 / 1280×720 / 640×360 / 320×180 •Fisheye + Panorama mode (max. 15 fps/12.5 fps) (Fisheye) 2992×2992 / 2192×2192 / 1280×1280 / 640×640 / 320×320 (Panorama) 1280×720 / 640×360 / 320×180
H.265/H.264	Transmission Mode : Constant bit rate / VBR / Frame rate / Best effort Transmission Type : Unicast port (AUTO)/ Unicast port (MANUAL)/ Multicast
JPEG	Image Quality : 10 steps
Smart Coding	GOP (Group of pictures) control : On (Frame rate control)* / On (Advanced)* / On (Mid) / On (Low) / Off *On (Frame rate control) and On (Advanced) are only available with H.265. Auto VIQS : On / Off
Audio Compression	G.726 (ADPCM) : 16 kbps / 32 kbps, G.711 : 64 kbps, AAC-LC : 64 kbps / 96 kbps / 128 kbps
Supported Protocol	IPv6 : TCP/IP, UDP/IP, HTTP, HTTPS, SSL/TLS, SMTP, DNS, NTP, SNMPv1/v2/v3, DHCPv6,RTP, MLD, ICMP, ARP, IEEE 802.1X,DiffServ, FTP, SFTP, MQTT, LLDP IPv4 : TCP/IP, UDP/IP, HTTP, HTTPS, SSL/TLS, RTSP, RTP, RTP/RTCP, SMTP, DHCP, DNS, DDNS, NTP, SNMPv1/v2/v3, UPnP, IGMP, ICMP, ARP, IEEE 802.1X, DiffServ, SRTP, FTP, SFTP, MQTT, LLDP
Maximum concurrent access number	Up to 14 users (Depends on network conditions)

Secure	FIPS 140-2 level 3 (NXP® EdgeLock® SE050F), Device Certificate GlobalSign® pre-installed, HTTPS, User authentication, Digest authentication, Host authentication, IEEE802.1X, System log, Image transmission log, Brute-force protection, Alteration detection, Signed Firmware
SDXC/SDHC/SD Memory Card (Option)	H.265 / H.264 recording : Manual REC / Alarm REC (Pre/Post) / Schedule REC JPEG recording : Manual REC / Alarm REC (Pre/Post) Compatible SDXC/SDHC/SD card : 2 GB, 4 GB*, 8 GB*, 16 GB*, 32 GB*, 64 GB**, 128 GB**, 256 GB**, 512 GB**model *SDHC card, ** SDXC card (except miniSD card and microSD card)
Mobile Terminal Compatibility	iPad / iPhone, AndroidTM terminals
ONVIF Profile	G / M / S / T

Alarm	
Alarm Source	3 terminals input, VMD, Command alarm
Alarm Actions	SDXC/SDHC/SD memory recording, E-mail notification,HTTP alarm notification, Indication on browser, TCP alarm notification output

Input/Output	
Audio Input	[For microphone] ø3.5 mm stereo mini jack, Recommended applicable microphone : Plug-in power type (Sensitivity of microphone : –48 dB ±3 dB (0 dB=1 V / Pa,1 kHz)) Input impedance : Approx. 2 kΩ (unbalanced) Supply voltage : 2.5 V ±0.5 V [For line] Input level : Approx. –10 dBV
Built-in microphone	Nondirectional electret condenser microphone
Audio Output	ø3.5 mm stereo mini jack (monaural output) Output impedance : Approx. 600 Ω (unbalanced) Output level : –20 dBV
External I/O Terminals	ALARM IN1 (Alarm input 1/ Auto time adjustment input) (x1) ALARM IN2 (Alarm input 2/ ALARM OUT) (x1) , ALARM IN3 (Alarm input 3/ AUX OUT) (x1)
Monitor Output	Yes (for adjustment) Φ3.5mm stereo mini jack, NTSC or PAL signal can be output from camera

General	
Safety	UL (UL62368-1), c-UL (CSA C22.2 No.62368-1), CE, IEC62368-1
EMC	FCC (Part15 ClassA), ICES003 ClassA, EN55032 ClassB, EN55035
Power Source and Power Consumption	DC power supply : DC 12 V 680 mA/Approx. 8.2 W , PoE (IEEE802.3af compliant) Device : DC 48 V 180 mA/Approx. 8.6 W (Class 0 device)
Ambient Operating Temperature	-10 °C to +50 °C (14 °F to 122 °F)
Ambient Operating Humidity	10% to 90 % (no condensation)
Dimensions	ø150 mm × 49.5 mm (H) {ø5-29/32 inches × 1-15/16 inches (H)}
Mass (Approx.)	Approx. 420 g {0.93 lbs}
Finish	Main body : ABS resin, i-PRO white

NOTES

Important
– Safety Precautions : Carefully read the Basic Information,Installation Guide and Operating Instructions before using this product.
– i-PRO Co., Ltd. cannot be held responsible for the performance of the network and/or other manufacturers' products used on the network.
– Masses and dimensions are approximate.
– Specifications are subject to change without notice.

Trademarks and registered trademarks
– iPad and iPhone are trademarks of Apple Inc., registered in the U.S.and other countries. – Android is a trademark of Google LLC.
– ONVIF is a trademark of ONVIF, Inc.
– All other trademarks identified herein are the property of their respective owners

©i-PRO Co., Ltd All rights reserved / March 2023

OPTIONAL ACCESSORIES

Select a compatible accessory
Accessory Selector (i-pro.com)

WV-Q105A
Mount Bracket

WV-QCL100-W
Mount Bracket

WV-QCL101-W
Mount Bracket

WV-QCL102-W
Universal Camera Mount Bracket

WV-QCN500-W
Mount Bracket

WV-QJB500-W
Mount Bracket

WV-QLR100-W
Light Rail Mount Bracket

WV-QPL500-W
Mount Bracket

WV-QWL500-W
Mount Bracket

WV-PM500
Compact microphone unit

WV-SDA512G
i-PRO SD Memory Card

WV-SDA256G
i-PRO SD Memory Card

WV-SDA128G
i-PRO SD Memory Card

WV-SDA064G
i-PRO SD Memory Card

WV-SDA032G
i-PRO SD Memory Card

APPEARANCE

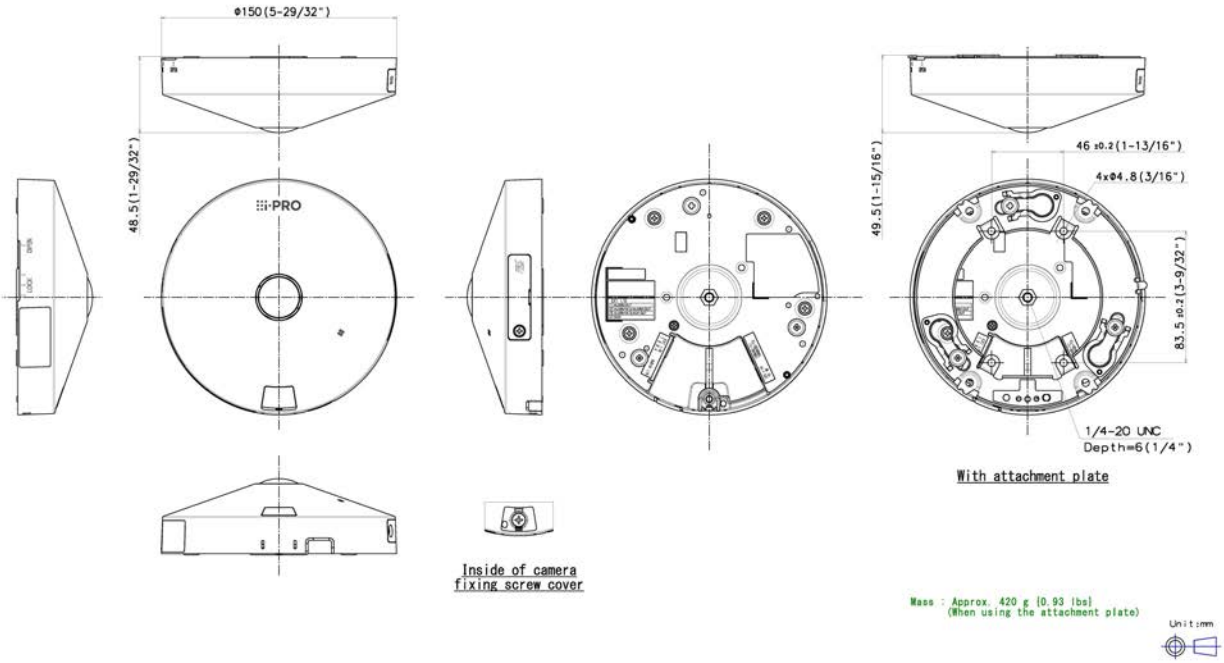
Φ150(5-29/32")
48.5(1-29/32")
i-PRO
Inside of camera
fixing screw cover
46 ±0.2(1-13/16")
4xΦ4.8(3/16")
49.5(1-15/16")
83.5 ±0.2(3-9/32")
1/4-20 UNC
Depth=6(1/4")
With attachment plate
Mass : Approx. 420 g (0.93 lbs)
(When using the attachment plate)
Unit:mm