WV-S25500-F6L

5MP Vandal Resistant Outdoor Dome Network Camera

S-series High resolution Network camera with AI engine

- 5MP
- Intelligent Auto (with AI Engine)
- Super Dynamic 132dB
- Color night vision (0.08 to 0.11 lx)
- Smart Coding (with AI Engine)
- Built-in IR LED
- 50J, IK10 Vandal Resistant
- Built-in FIPS 140-2 Level 3 Compliant Secure Element
  (EdgeLock® SE050F NXP® Semiconductors)
- NDAA Compliant

SPECIFICATIONS

Camera	
Image Sensor	Approx. 1/2.8 type CMOS image sensor
Scanning Area	5.12 mm (H)×3.84 mm (V) {3/16 inches (H) × 5/32 inches (V)}
Minimum Illumination	Color : 0.08 lx (30IRE, F1.5, 1/30s, AGC:11)* 0.11 lx (50IRE, F1.5, 1/30s, AGC:11) 0.007 lx (50IRE, F1.5, 16/30s, AGC:11)* BW : 0 lx (50IRE, F1.5, 1/30s, AGC:11, IR LED: On) 0.07 lx (50IRE, F1.5, 1/30s, AGC:11) 0.004 lx (50IRE, F1.5, 16/30s, AGC:11)* *Converted value
White Balance	ATW1 / ATW2 / AWC
Shutter Speed	[30 fps] 1/30 Fix to 1/10000 Fix, [25 fps] 1/25 Fix to 1/10000 Fix
Maximum Shutter	[30 fps mode] Max. 1/4000 s to Max. 16/30 s [25 fps mode] Max. 1/4000 s to Max. 16/25 s
Intelligent Auto	On / Off
Super Dynamic*2	On / Off, The level can be set in the range of 0 to 31.
Dynamic Range	Max.132 dB (Super Dynamic : On, Level 31)
Adaptive Black Stretch	The level can be set in the range of 0 to 255.
Back light compensation / High light compensation	BLC (Back light compensation) / HLC (High light compensation) / Off (only when Super dynamic / Intelligent Auto : Off)
Fog Compensation	On / Off (only when Intelligent auto / auto contrast adjust : Off)
Maximum Gain (AGC)	The level can be set in the range of 0 to 11.
Color/BW (ICR)	Off / On (IR Light Off) / On (IR Light On) / Auto1 (IR Light Off) / Auto2 (IR Light On) / Auto3 (SCC)
IR LED Light	High / Middle / Low / Off, Maximum irradiation distance : 45 m {Approx. 148 ft} (30IRE) 30 m {Approx. 98 ft} (50IRE)
Digital Noise Reduction	The level can be set in the range of 0 to 255.
Video Motion Detection (VMD)	On / Off, 4 areas available
Scene Change Detection (SCD)	On / Off, 1 areas available
Audio Detection	On / Off
AI Sound classification	Gunshot, Yell, Vehicle horn, Glass break
AI Analytics	AI Video Motion Detection, AI Privacy Guard, AI Face Detection, AI People Detection, AI Vehicle Detection, AI Non mask Detection (prior to V2.70), AI Occupancy Detection, AI Scene Change Detection For details : https://i-pro.com/products_and_solutions/en/surveillance/products/analytics-software 3rd party applications are also available. https://i-pro.com/products_and_solutions/en/surveillance/solutions/edge-ai-platform/application-list
Privacy Zone	On / Off, Up to 8 zones available

VIQS	On / Off, Up to 8 zones available
Image rotation*3	0 ° / 90 ° / 180 ° / 270 °
Camera Title (OSD)	On / Off, Up to 40 characters (alphanumeric characters, marks)

Lens	
Optical Zoom	1x
Extra zoom	1x - 3x (when resolution is 640 x 360)
Focal Length	6.1 mm {1/4 inches}
Angular Field of View	[16 : 9 mode] Horizontal : 48°, Vertical : 27° [4 : 3 mode] Horizontal : 48°, Vertical : 36°
Maximum Aperture Ratio	1 : 1.6
Focusing Range	4.0 m {157-15/32 inches} – ∞

DORI	
Detect (25ppm / 8ppf)	138 m / 452.7 ft
Observe (62.5ppm / 19ppf)	55.2 m / 181.1 ft
Recognize (125ppm / 38ppf)	27.6 m / 90.5 ft
Identify (250ppm / 76ppf)	13.8 m / 45.3 ft

System on Chip (SoC)	
System on Chip (SoC)	Ambarella CV22

Adjusting Angle	
Adjusting Angle	Horizontal : -194 to +166°, Vertical : -30 to +85°, Yaw : ±100°

Browser GUI	
Camera Control	Brightness, AUX On / Off
Audio	Mic (Line) Input : On / Off Volume adjustment : Low / Middle / High Audio Output : On / Off Volume adjustment : Low / Middle / High
GUI / Setup Menu Language	English, Italian, French, German, Spanish, Portuguese, Russian, Chinese, Japanese
Browser*4	Microsoft Edge, Firefox, Google Chrome

Network	
Network IF	10Base-T / 100Base-TX, RJ45 connector
Resolution H.265/ H.264/ JPEG (MJPEG)	[16:9 mode (30 fps mode)][16:9 mode (25 fps mode)] 3072x1728/2560x1440/1920x1080/1280x720/640x360/320x180 [4:3 mode (30 fps mode)][4:3 mode (25 fps mode)] 3072x2304/2560x1920/1280x960/800x600/VGA/400x300/320x240
JPEG - Image Quality	10 steps
Smart Coding	GOP (Group of pictures) control: Off/ Low (Variable GOP 1s-8s)/ Mid (Variable GOP 4s-16s)/ Advanced(Fixed GOP 60s w/1s key-frame)/ Frame rate control (Variable GOP 4s-16s with frame rate control) *Advanced and Frame rate control are only available with H.265. Smart VIQS: On(High)/On(Low)/Off, Smart P-picture control: On/Off
Audio Compression	G.726 (ADPCM) : 16 kbps / 32 kbps G.711 : 64 kbps AAC-LC : 64 kbps / 96 kbps / 128 kbps
Audio Transmission Mode	Off / Mic (Line) input / Audio output / Interactive (Half duplex) / Interactive (Full duplex)

Supported Protocol	IPv6 : TCP/IP, UDP/IP, HTTP, HTTPS, SSL/TLS, SMTP, DNS, NTP, SNMPv1/v2/v3, DHCPv6, RTP, MLD, ICMP, ARP, IEEE 802.1X, DiffServ, SFTP, MQTT, LLDP IPv4 : TCP/IP, UDP/IP, HTTP, HTTPS, SSL/TLS, RTSP, RTP, RTP/RTCP, SMTP, DHCP, DNS, DDNS, NTP, SNMPv1/v2/v3, UPnP, IGMP, ICMP, ARP, IEEE 802.1X, DiffServ, SRTP, SFTP, MQTT, LLDP
No. of Simultaneous Users	Up to 14 users (Depends on network conditions)
Secure	FIPS 140-2 level 3 (NXP® EdgeLock® SE050F), Device Certificate GlobalSign® pre-installed, HTTPS, User authentication, Digest authentication, Host authentication, IEEE802.1X, System log, Image transmission log, Brute-force protection, Alteration detection, Signed Firmware
SDXC/SDHC/SD Memory Card (Option)	H.265 / H.264 recording : Manual REC / Alarm REC (Pre/Post) / Schedule REC / Backup upon network failure JPEG recording : Manual REC / Alarm REC (Pre/Post) / Backup upon network failure Compatible SDXC/SDHC/SD Memory Card : microSDXC memory card : 64 GB, 128 GB, 256 GB, 512 GB microSDHC memory card : 4 GB, 8 GB, 16 GB, 32 GB microSD memory card : 2 GB
Mobile Terminal Compatibility	iPad, iPhone(iOS 8.0 or later), Android™ terminals
ONVIF Profile	G / M / S / T

Alarm	
Alarm Source	3 terminals input, VMD alarm, Command alarm, Audio detection alarm
Alarm Actions	SDXC/SDHC/SD memory recording, E-mail notification, HTTP alarm notification Indication on browser, TCP alarm notification output

Input/Output	
Audio input*8	ø3.5 mm stereo mini jack
Audio Output*8	ø3.5 mm stereo mini jack (monaural output) Output impedance : Approx. 600 Ω (unbalanced) Output level : −20 dBV
External I/O Terminals*8	ALARM IN 1 (Alarm input 1/ Black & white input/ Auto time adjustment input) (x1) ALARM IN 2 (Alarm input 2/ ALARM OUT) (x1), ALARM IN 3 (Alarm input 3/ AUX OUT) (x1)
Monitor Output	Yes (for adjustment) Pin jack, NTSC or PAL signal can be output from camera

General	
Safety	UL (UL62368-1), c-UL (CSA C22.2 No.62368-1), CE, IEC62368-1
EMC	FCC (Part15 ClassA), ICES-003 ClassA, EN55032 ClassA, EN55035
Power Source and Power Consumption	DC power supply : DC12 V 880 mA, Approx. 10.6 W PoE (IEEE802.3af compliant) Device : DC48 V 220 mA, Approx. 10.6 W (Class 0 device)
Ambient Operating Temperature	-40 °C to +60 °C (-40 °F to 140 °F)*9 (Power On range : −30 °C to +60 °C {−22 °F to +140 °F})
Ambient Operating Humidity	10 to 100 % (no condensation)
Anti-Condensation System	Temish element + Heater + moisture absorption gel
Water and Dust Resistance	IP66, Type 4X(UL50E), NEMA 4X compliant
Shock Resistance	50 J (IEC 60068-2-75 compliant), IK10 (IEC62262)
Wind Resistance	Up to 40 m/s {approx. 89 mph}
Dimensions	ø154 mm x 105 mm (H) {ø6-1/16 inches x 4-1/8 inches (H)}
Mass (Approx.)	Approx. 1.1 kg {2.43 lbs.}
Finish	Main body : Aluminum die cast, i-PRO white Outer fixing screws : Stainless steel (Corrosion-resistant treatment) Dome section : Polycarbonate resin, Clear

NOTES

Important
– Safety Precautions : Carefully read the Basic Information,Installation Guide and Operating Instructions before using this product.
– i-PRO Co., Ltd. cannot be held responsible for the performance of the network and/or other manufacturers' products used on the network.
– Masses and dimensions are approximate. Specifications are subject to change without notice.
Trademarks and registered trademarks
– iPad and iPhone are trademarks of Apple Inc., registered in the U.S.and other countries. – Android is a trademark of Google LLC.
– ONVIF is a trademark of ONVIF, Inc.
– All other trademarks identified herein are the property of their respective owners
©i-PRO Co., Ltd All rights reserved / November 2022

OPTIONAL ACCESSORIES

Select a compatible accessory
Accessory Selector (i-pro.com)

WV-QWL506-W
4-screw Wall Mount Bracket

WV-QWL506M1-W
ANSI Male Wall Mount Bracket (1.5"NPT)

WV-QWL501-W
Mount Bracket

WV-QWL500-W
Mount Bracket

WV-QSR501-W
Mount Bracket

WV-QSR500-W
Sun Shade

WV-QPL500-W
Mount Bracket

WV-QJB504-W
Base Bracket

WV-QJB501-W
Base Bracket

WV-QJB500-W
Mount Bracket

WV-QEM500-W
Mount Bracket

WV-QCN500-W
Mount Bracket

WV-QCL501-W
Mount Bracket

WV-QCL101-W
Mount Bracket

WV-QCL100-W
Mount Bracket

WV-Q105A
Mount Bracket

WV-QCA501A
I/O Cable

WV-QCA500A
RJ45 Ethernet Cable

WV-CW7SN
Dome cover

WV-CW7S
Dome cover

WV-CW7CN
Dome cover

WV-QSR505-W
Sun Shade

WV-QSR501F1-W
Mount Bracket

WV-QSR501M1-W
Mount Bracket

WV-QSR501F-W
Mount Bracket

WV-QSR501M-W
Mount Bracket

WV-PM500
Compact microphone unit

WV-QDC504C
Dome Cover

WV-SDB256G
i-PRO SD Memory Card

WV-SDB128G
i-PRO SD Memory Card

WV-SDB064G
i-PRO SD Memory Card

WV-SDB032G
i-PRO SD Memory Card

APPEARANCE

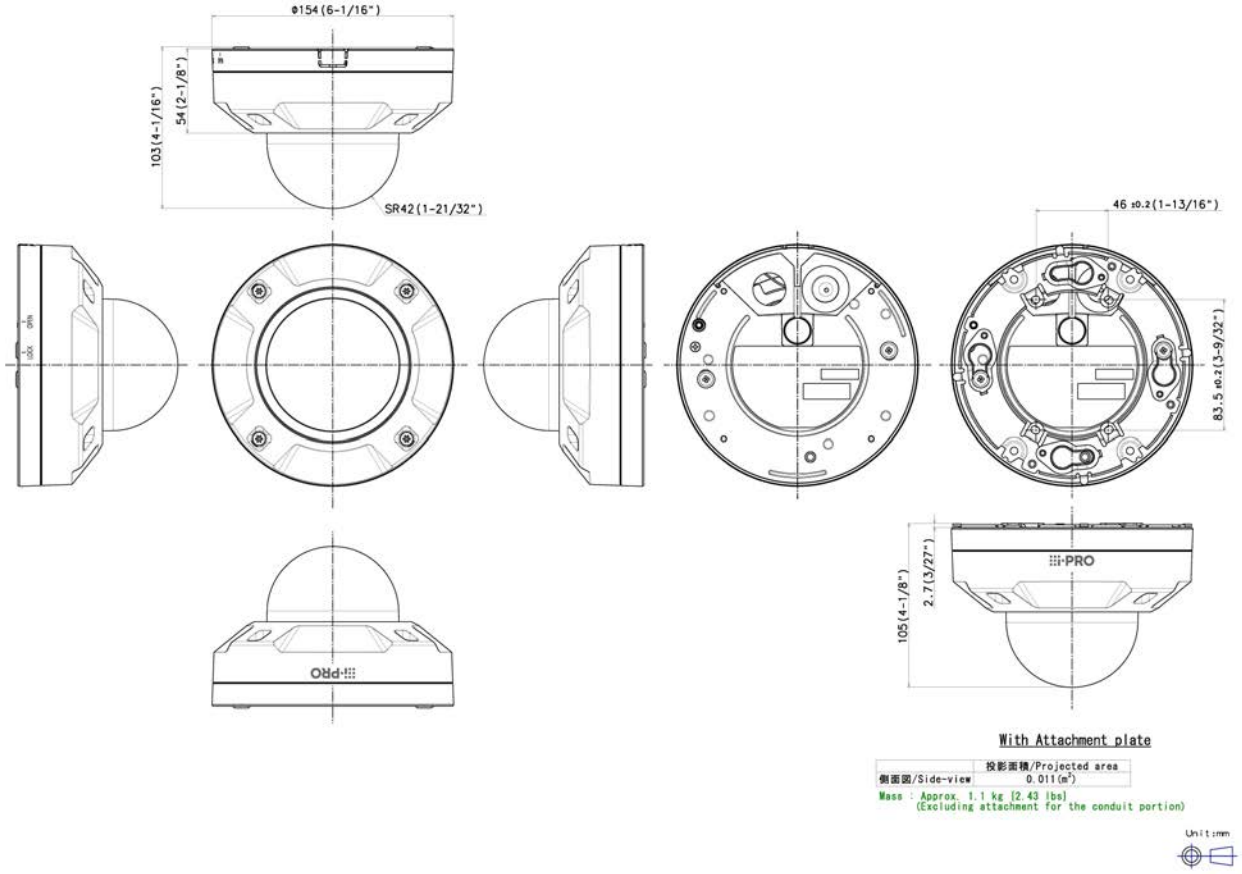
ø154 (6-1/16")
54 (2-1/8")
103 (4-1/16")
SR42 (1-21/32")
46 ±0.2 (1-13/16")
83.5 ±0.2 (3-9/32")
2.7 (3/27")
105 (4-1/8")
i-PRO
With Attachment plate
投影面積/Projected area
側面図/Side-view
0.011 (m²)
Mass : Approx. 1.1 kg (2.43 lbs)
(Excluding attachment for the conduit portion)
Unit:mm